Parts Manual

Mfg. No: 1044-0
3,000 PSI

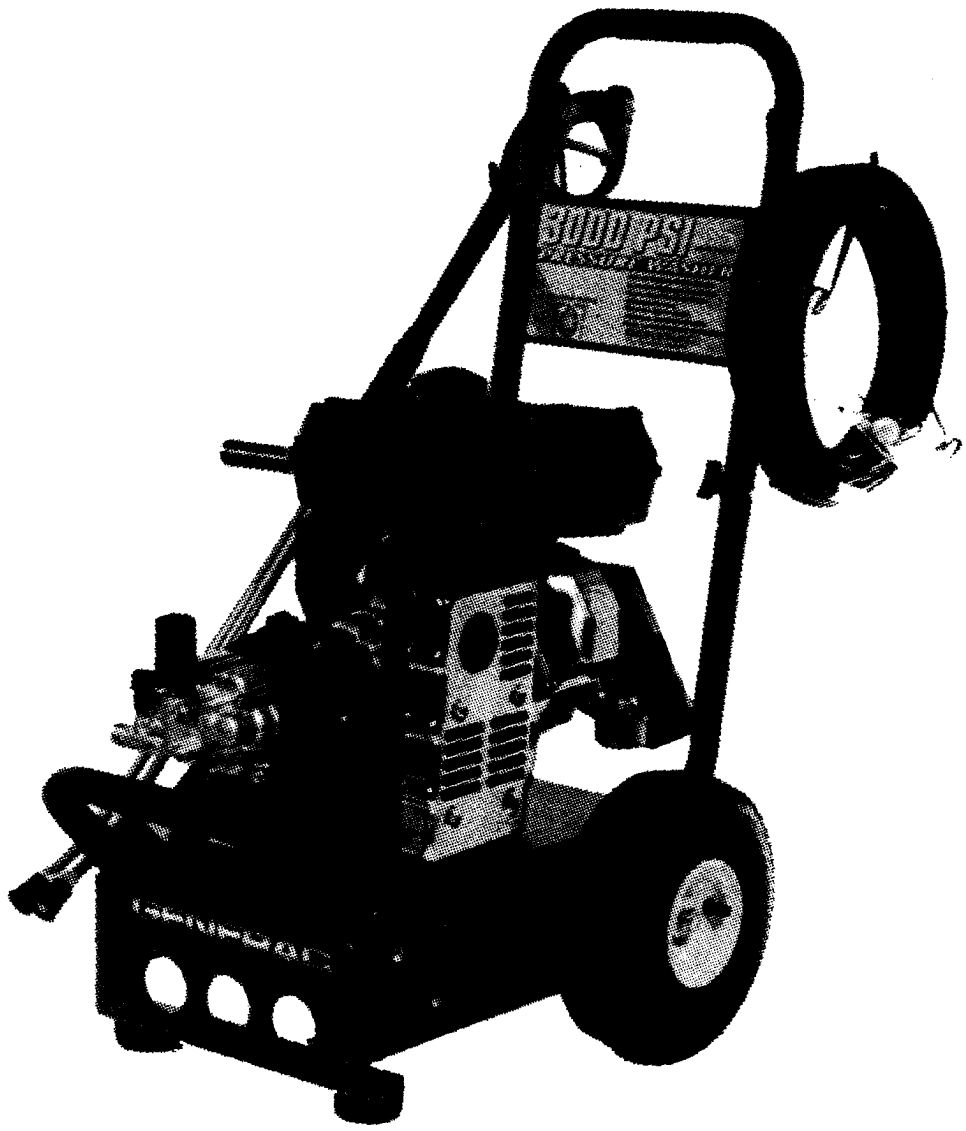

Copyright © Briggs & Stratton. All Rights reserved

Model Components

Page

Pressure Washer. 4
Pump. 8
Torque Specification Chart. 10

Not For Reproduction

Copyright © Briggs & Stratton. All Rights reserved

Pressure Washer

Note: Unless noted otherwise, use the standard torque specifications

Mfg. No: 1044-0

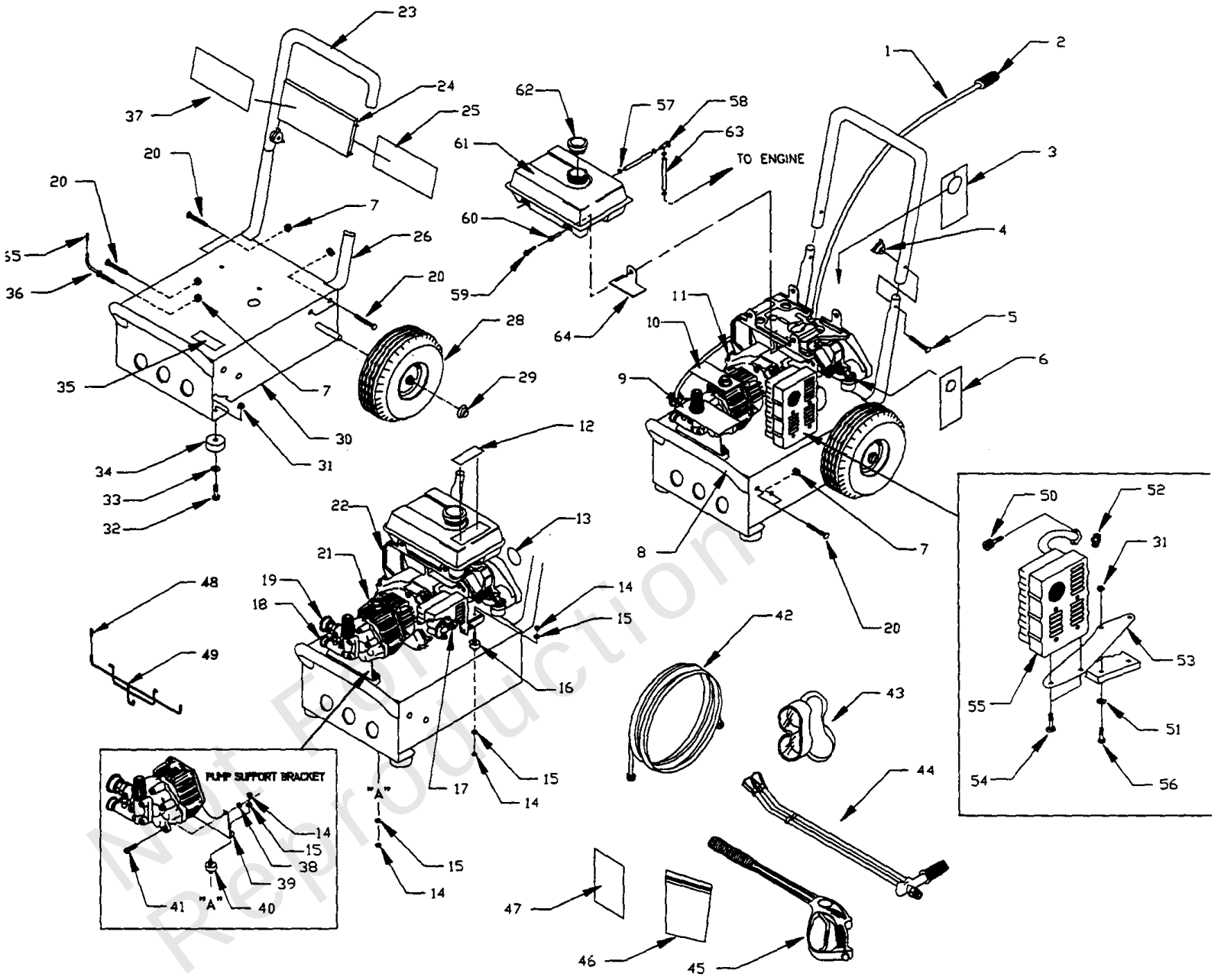

Not For Reproduction

Copyright © Briggs & Stratton. All Rights reserved

Pressure Washer

REF NO	PART NO	QTY	DESCRIPTION
1	A1040D	1	HOSE, 4.5' Chemical Clear
2	A1041	1	FILTER, Chemical Hose
3	70453	1	TAG, Warning Oil
4	97178	2	KNOB, Handle 1/4-20 PW
5	31669	2	BOLT, 1/4-20 x 1-3/4 Carriage
6	81210	1	TAG, Start Instructions
7	99583	8	NUT, Flange Lock 5/16-18
8	B1982	1	BUMPER
9	97054	1	TAG, Pres. Adjust
10	B1288	1	TAG, PW Breather Cap
11	B1232	1	CLAMP, Hose 7/16" Dia.
12	21786	1	DECAL, Danger
13	91682B	1	DECAL, Recoil
14	45771	8	NUT, M8-1.25 Hex
15	22129	8	LOCKWASHER, M8
16	21217	2	MOUNT, Rubber Shock
17	74031	.001	QT., Liquid Neoprene
18	97100	1	CAP, H.P. Adaptor
19	97098	1	CAP, Garden Hose Inst
20	B2043	7	BOLT, 5/16-18 x 1-3/4 Carriage
21	-----	1	ASSEMBLY, Pump -See "Pump" illustration and parts list.
22	ENGB2219	1	ENGINE
23	B1983	1	HANDLE
24	B1631A	1	BILLBOARD, Plastic
25	B1932	1	DECAL, Instructions
26	B1981	2	SUPPORT, Handle
27	B2192	1	DECAL, Generac
28	88521	2	ASSEMBLY, 10' Tile & Wheel
29	75402	2	PUSHNUT, .50 Dia.
30	AB2226	1	BASE
31	52858	3	NUT, M8 1.25 Locking
32	42909	2	HHCS, M8 1.25 x 30
33	50190	2	WASHER, M8 Flat
34	27007	2	MOUNT, Donut Type Vibration
35	20566	1	DECAL, Generac #1-800
36	82150	1	HOOK, Gun
37	82113	1	DECAL, Logo
38	52857	2	NUT, M6 1.0 Locking
39	20707	1	BRACKET, Pump Support
40	21216	2	MOUNT, Rubber Shock
41	38750	2	HHCS, M6 1.0 x 30
42	91630	1	HOSE, High Pressure
43	87815	1	GOGGLES
44	B2140C	1	LANCE, Dual
45	B1862	1	GUN, High Pressure
46	B2203	1	KIT, Handle Fastening
47	B2508	1	KIT, Cleaning
48	B1460	2	CAP, Vinyl (black)
49	B2168	1	HANGER, Hose, Gun, Jug
50	40976	2	SHCS, M8 1.25 x 20

Not For Reproduction

Copyright © Briggs & Stratton. All Rights reserved

Pressure Washer

Note: Unless noted otherwise, use the standard torque specifications

Mfg. No: 1044-0

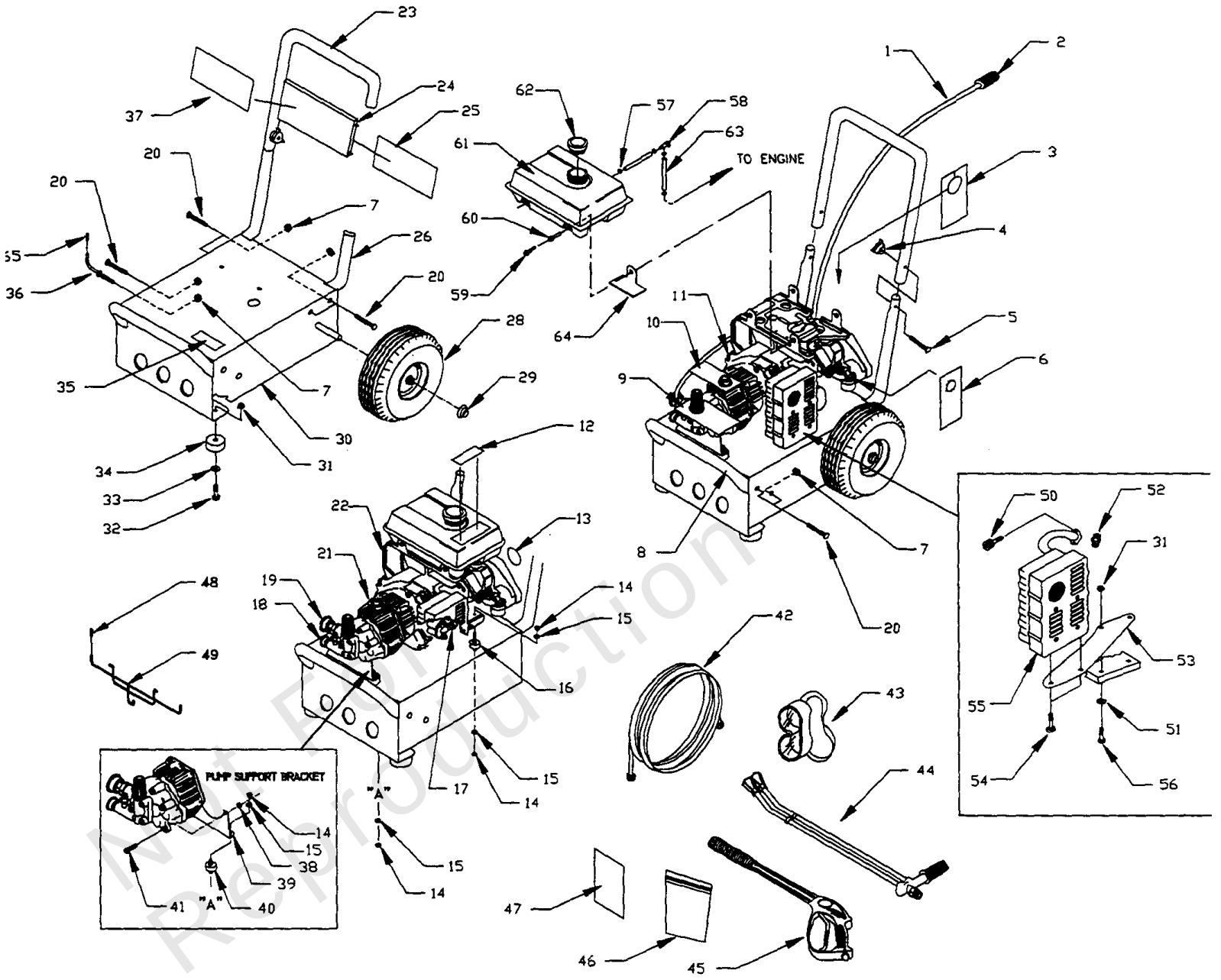

Not For Reproduction

Copyright © Briggs & Stratton. All Rights reserved

Pressure Washer

REF NO	PART NO	QTY	DESCRIPTION
51	-----	1	WASHER, Flat, 5/16
52	89476	1	GASKET, Exhaust
53	83208	1	BRACKET, Muffler
54	66476	2	HHCS, M6 1.0 x 12
55	83071	1	MUFFLER
56	39414	1	HHCS, M8-1.25 x 35
57	48031C	3	CLAMP, Hose
58	96193	1	VALVE, Fuel Shut Off
59	96001	4	BOLT, M6-1.0 x 21 Lg. Shoulder
60	96002	4	BUSHING, Tank
61	94994	1	TANK, 1 Gal Fuel
62	95549	1	CAP, Fuel
63	30340	1	HOSE, Fuel-1/4 I.D.
64	21545	1	SHIELD, Heat
65	B2516	1	CAP, Vinyl (black)

Not For Reproduction

Copyright © Briggs & Stratton. All Rights reserved

Pump

Note: Unless noted otherwise, use the standard torque specifications

Mfg. No: 1044-0

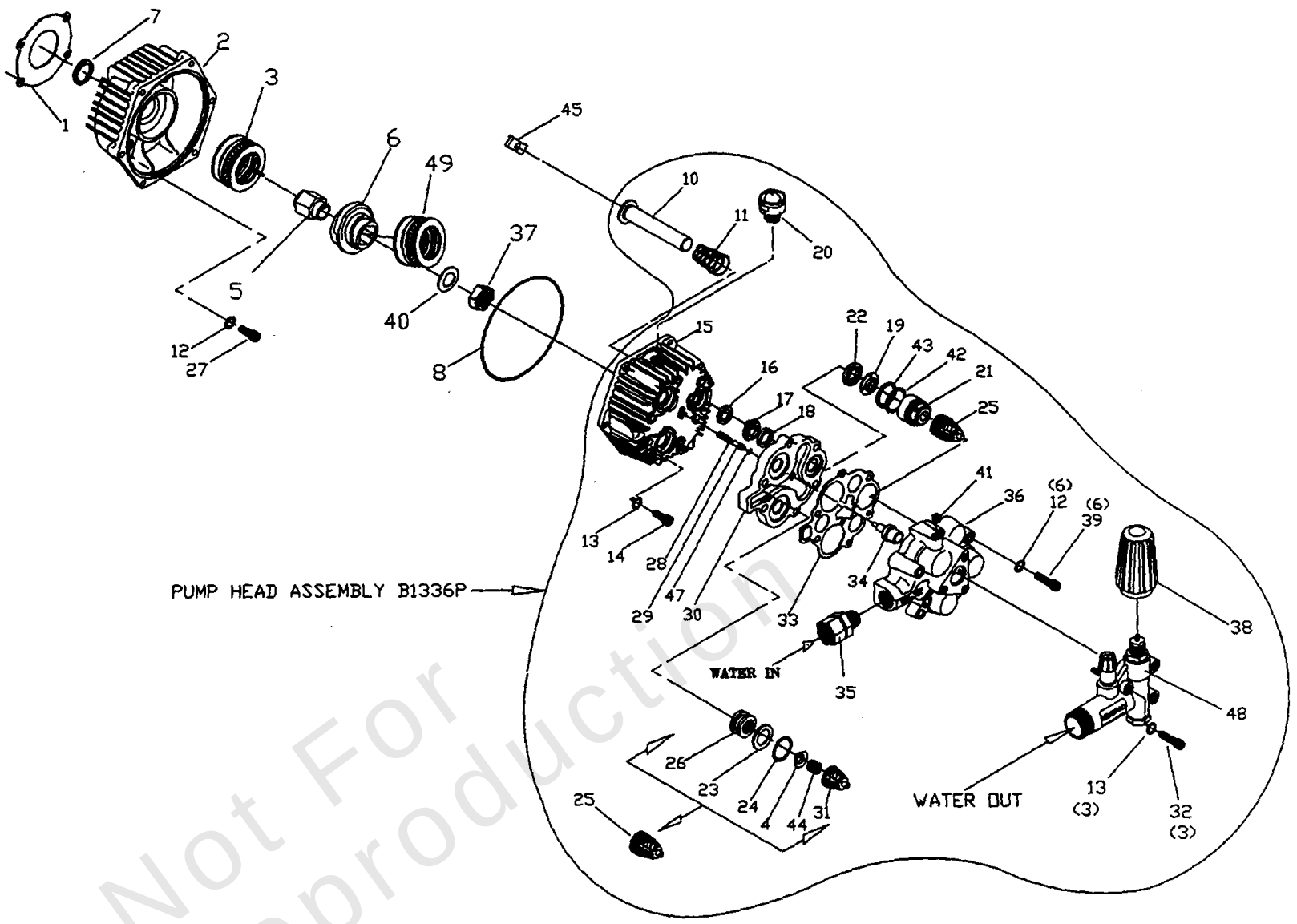

NOTE: Numbers in ( ) are quantities

Not For Reproduction

Copyright © Briggs & Stratton. All Rights reserved

Pump

REF NO	PART NO	QTY	DESCRIPTION
1	93871	1	GASKET, ENGINE ADAPTOR
2	96430A	1	ADAPTOR, ENGINE
3	96542	1	BEARING, ROLLER THRUST
4	97215	6	POPPET, CHECK VALVE
5	95165	1	ADAPT., ENG. SHAFT
6	21277V	1	AXIAL CAM
7	95441	1	SLEEVE, ENG, ADAPTOR
8	93790	1	"O" RING
10	99427	3	PISTON
11	96400	3	SPRING, PISTON RETURN
12	92479	10	LOCKWASHER, M8-RIBBED
13	93873	9	LOCKWASHER, M6-RIBBED
14	40945	9	M6 x 1 x 20 LONG SHCS.
15	97568A	1	CRANKCASE, ALUMINUM
16	93680	3	SEAL, OIL-PISTON
17	93668	3	SPACER, PILOT
18	93667	3	SEAL, LO-PRES "U" PAK
19	96015	3	RING, BEARING SEAL
20	99735	1	CAP, BREATHER
21	97027	3	TOWER, HIGH PRESS. PORT
22	96053	3	SEAL, HIGH PRESS. - BLACK
23	95504	6	RING, BACK-UP
24	95503	6	"O" RING
25	97128	6	KIT, CHECK VALVE
26	97028		SUPPORT,CHECK VALVE,PLASTIC 6
27	23707	4	BOLT, 5/16-24 x 1" SHC
28	93652	1	SPRING, THERMAL BY-PASS
29	95416	1	PISTON, BY-PASS
30	97122P	1	PLATE, SPACER
31	89137	6	GUIDE, CHECK VALVE PLASTIC
32	46580	3	M6-1 x 45 SHCS
33	93645	1	GASKET, HEAD
34	93644	1	ACTUATOR, THERMAL BY-PASS
35	95320	1	CONNECTOR, GARDEN HOSE
36	95138	1	HEAD, CYLINDER
37	93887	1	NUT, JAM.
38	B1339	0	HANDLE -(Replacement Part Only)
39	93874	6	SHCS, M8-1.25 x 75
40	94738	1	WASHER, BELLEVILLE
41	96137	1	Plug, Pipe 1/8 NPT
42	96069	3	"O" RING
43	95506	3	RING, BACK-UP
44	89138	6	SPRING, CHECK VALVE
45	94944	3	SHOE, PISTON PIVOT
47	93876	1	"O"-RING
48	21746	1	ASSEMBLY, UNLOADER
49	97606	1	BEARING ASSEMBLY

Not For Reproduction

Copyright © Briggs & Stratton. All Rights reserved

Hardware Identification & Torque Specifications

Torque Specification Chart

FOR STANDARD METRIC MACHINE HARDWARE (Tolerance ± 20%)

Property Class	5.6 Class 5.6		8.8 Class 8.8		10.9 Class 10.9		12.9 Class 12.9	
Size Of Hardware	*in/lbs* **ft/lbs**	Nm.	*in/lbs* **ft/lbs**	Nm.	*in/lbs* **ft/lbs**	Nm.	*in/lbs* **ft/lbs**	Nm.
M3	*5.88*	*.56*	*13.44*	*1.28*	*19.2*	*1.80*	*22.92*	2.15
M4	*13.44*	*1.28*	*30.72*	*2.90*	*43.44*	*4.10*	*52.56*	4.95
M5	*26.4*	*2.50*	*60.96*	*5.75*	**5.97**	*8.10*	**7.15**	9.7
M6	*44.64*	*4.3*	**7.3**	*9.9*	**10.3**	*14*	**12.1**	16.5
M7	**5.2**	*7.1*	**12.1**	*16.5*	**16.9**	*23*	**19.9**	27
M8	**7.7**	*10.5*	**17.7**	*24*	**25**	*34*	**29**	40
M10	**15**	*21*	**35**	*48*	**50**	*67*	**59**	81
M12	**26**	*36*	**61**	*83*	**86.2**	*117*	**103**	140
M14	**42**	*58*	**101**	*132*	**136**	*185*	**162**	220
M16	**64**	*88*	**147**	*200*	**210**	*285*	**250**	340
M18	**89**	*121*	**202**	*275*	**287**	*390*	**346**	470
M20	**126**	*171*	**290**	*390*	**405**	*550*	**486**	660
M22	**169**	*230*	**390**	*530*	**559**	*745*	**656**	890
M24	**217**	*295*	**497**	*375*	**708**	*960*	**840**	1140
M27	**320**	*435*	**733**	*995*	**1032**	*1400*	**1239**	1680
M30	**435**	*590*	**995**	*1350*	**1401**	*1900*	**1681**	2280
M33	**590**	*800*	**1349**	*1830*	**1902**	*2580*	**2278**	3090
M36	**759**	*1030*	**1740**	*2360*	**2441**	*3310*	**2935**	3980
M39	**988**	*1340*	**2249**	*3050*	**3163**	*4290*	**3798**	5150

The guides and ruler furnished below are designed to help you select the appropriate hardware.

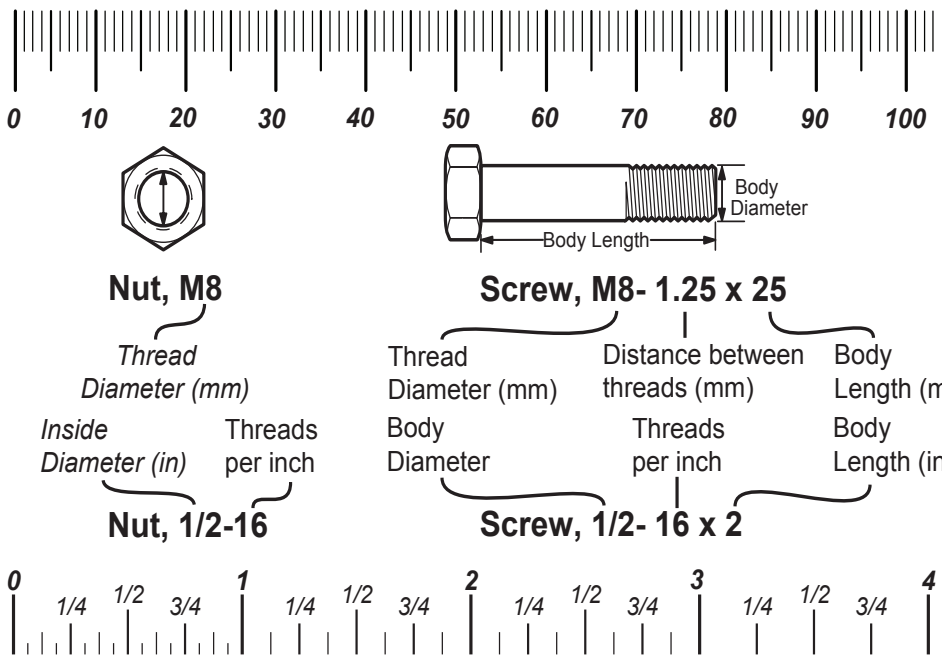

Standard Hardware Sizing

When a washer or nut is identified as **1/2"** (M8), this is the *Nominal size*, meaning the *inside diameter* is 1/2 inch (8mm metric thread diameter); if a second number is present it represents the *threads per inch* (distance between threads).

When bolt or capscrew is identified as **1/2 - 16 x 2"** (M8 - 1.25 x 50), this means the *Nominal size*, or body diameter is 1/2 inch (8mm metric thread diameter), the second number,16, represents the *threads per inch, (distance between threads).* The final number is the body length of the bolt or screw, 2 inches (50mm).

Torque Specification Chart

FOR STANDARD MACHINE HARDWARE (Tolerance ± 20%)

Hardware Grade	No Marks SAE Grade 2		SAE Grade 5		SAE Grade 8	
Size Of Hardware	*in/lbs* **ft/lbs**	Nm.	*in/lbs* **ft/lbs**	Nm.	*in/lbs* **ft/lbs**	Nm.
8-32	*19*	2.1	*30*	3.4	*41*	4.6
8-36	*20*	2.3	*31*	3.5	*43*	4.9
10-24	*27*	3.1	*43*	4.9	*60*	6.8
10-32	*31*	3.5	*49*	5.5	*68*	7.7
1/4-20	*66*	7.6	**8**	10.9	**12**	16.3
1/4-28	*76*	8.6	**10**	13.6	**14**	19.0
5/16-18	**11**	15.0	**17**	23.1	**25**	34.0
5/16-24	**12**	16.3	**19**	25.8	**29**	34.0
3/8-16	**20**	27.2	**30**	40.8	**45**	61.2
3/8-24	**23**	31.3	**35**	47.6	**50**	68.0
7/16-14	**30**	40.8	**50**	68.0	**70**	95.2
7/16-20	**35**	47.6	**55**	74.8	**80**	108.8
1/2-13	**50**	68.0	**75**	102.0	**110**	149.6
1/2-20	**55**	74.8	**90**	122.4	**120**	163.2
9/16-12	**65**	88.4	**110**	149.6	**150**	204.0
9/16-18	**75**	102.0	**120**	163.2	**170**	231.2
5/8-11	**90**	122.4	**150**	204.0	**220**	299.2
5/8-18	**100**	136	**180**	244.8	**240**	326.4
3/4-10	**160**	217.6	**260**	353.6	**386**	525.0
3/4-16	**180**	244.8	**300**	408.0	**420**	571.2
7/8-9	**140**	190.4	**400**	544.0	**600**	816.0
7/8-14	**155**	210.8	**440**	598.4	**660**	897.6
1-8	**220**	299.2	**580**	788.8	**900**	1,244.0
1-12	**240**	326.4	**640**	870.4	**1,000**	1,360.0

NOTES

1. These torque values are to be used for all hardware excluding: locknuts, self-tapping screws, thread forming screws, sheet metal screws and socket head setscrews.
2. Recommended seating torque values for locknuts:
   a. for prevailing torque locknuts - use 65% of grade 5 torques.
   b. for flange whizlock nuts and screws - use 135% of grade 5 torques.
3. Unless otherwise noted on assembly drawings, all torque values must meet this specification.

Common Hardware Types

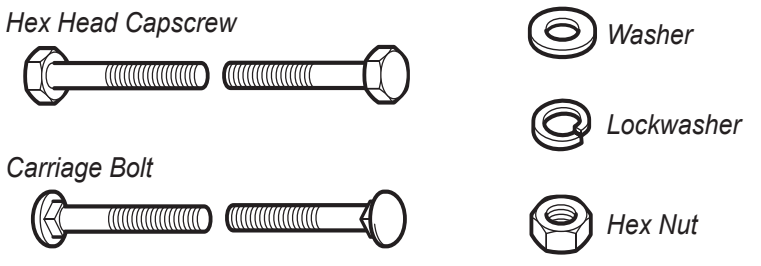

Wrench & Fastener Size Guide

1/4" Bolt or Nut Wrench—7/16"

5/16" Bolt or Nut Wrench—1/2"

3/8" Bolt or Nut Wrench—9/16"

7/16" Bolt or Nut Wrench (Bolt)—5/8" Wrench (Nut)—11/16"

1/2" Bolt or Nut Wrench—3/4"

M6 Bolt or Nut Wrench—10mm

M8 Bolt or Nut Wrench—13mm

M10 Bolt or Nut Wrench—17mm

M12 Bolt or Nut Wrench—19mm

M14 Bolt or Nut Wrench—22 mm

Copyright © Briggs & Stratton. All Rights reserved